Job Name:

Type:

Part #:

Notes:

EHLCWLEZU

All LED Hazardous Exit & Emergency Combo.



ILLUMINATION:
• Two fully adjustable, ultra bright 3.6 watt high performance MR-16 base LED lamp heads for optimized center-to-center spacing.
• Long-life, energy efficient Red or Green LED EXIT sign illumination.

ELECTRICAL:
• Dual 120/277 voltage.
• Unique bi-color LED indicator light alerts occupant on battery condition (Green-normal, Red-check-battery).
• Charge rate/power “ON” LED indicator light and magnetic test switch for mandated code compliance testing.
• 6V/12V maintenance-free, rechargeable NiCd battery (12W, 15W models).
• Offers 4.8W and 7.8W of remote capacity (6V/12V DC output) standard on the 12W and 15W models.
• Internal solid-state transfer switch automatically connects the internal battery to LED board and lamp heads for minimum 90-minute emergency illumination.
• Fully automatic solid-state, two-rate charger initiates battery charging to recharge a discharged battery in 24 hours.

MOUNTING: Pre-installed conduit hub for conduit and pendant-mount installation.

HOUSING:
• Housing is fiberglass reinforced polycarbonate construction in gray finish.
• Corrosion-resistant enclosure with one piece, high-impact resistant, UV stabilized polycarbonate lens and molded gasket with stainless steel screws.
• EZ snap-out Chevron directional indicators.

OPTIONS:
• SDT: Self-diagnostic feature performs monthly, biannual, and annual tests to ensure reliable operation and meets electrical and life safety codes.
• CW: Optional internal heater and battery blanket for extreme cold temperature applications (-20°C – 50°C).
• TP: Tamper-proof hardware helps discourage unauthorized access to the unit.
• NH: No lamp heads attached to the unit enabling it to be used as a remote capable EXIT sign.

WARRANTY / LISTING:
• Five year warranty on all electronics and housing. Batteries prorated for five years.
• Meets UL924, UL844, NFPA101 Life Safety Code, NEC, OSHA, Local and State Codes.
• IP66 rated for Ingress protection.
• Rated for Class 1, Division 2, Groups A,B,C, & D.
• UL listed for wet locations (0°C – 50°C).

STANDARD | *OPTIONAL*

DIMENSIONS

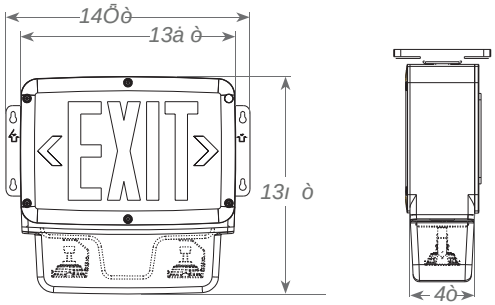

REMOTE LAMP COMPATIBILITY

Reference remote lamp head specification sheets for complete catalog number ordering information.

BATTERY	REMOTE CAPACITY	RHLED[2]	SRHLED[2]	RHLED16[2]	HLRHLED
6V, 12V	7.8W[1]	X	X	X	X

[1] *For single-face models*

[2] *Not Class1 Division 2 rated. For use in non-hazardous locations only.*

2026.10

Office 215-512-7000 ÅFax: 267-288-5604
www.EnvoyLighting.com

Specifications Subject to Change Without Prior Notice
É 2026, Envoy Lighting, Inc. ALL RIGHTS RESERVED

Job Name:

Type:

Part #:

Notes:

ORDERING INFORMATION

Sample Part Number: **EHLCWLEZU1R615G**

MODEL	No. of FACES	LETTER COLOR	VOLTAGE	WATTAGE	HOUSING COLOR	OPTIONS
EHLCWLEZU	1 Single[1]	R Red	6 6 volts	12 12 watts	G Gray	SDT Self-Diagnostics
	2 Double[2]	G Green	12 12 volts	15 15 watts		CW Cold Weather
						TP Tamper-Proof
						NH No Heads

[1] *Available only in 15W models.*

[2] *Available only in 12W models.*

ELECTRICAL INFORMATION

EHLCWLEZU Series Model with Input Voltage Rating	Vac	Hz	A	W
6V	120	60	0.2	16
	277	60	0.07	19
12V	120	60	0.14	16
	277	60	0.07	18

2026.10

Office 215-512-7000 • Fax: 267-288-5604
www.EnvoyLighting.com

Specifications Subject to Change Without Prior Notice
© 2026, Envoy Lighting, Inc. ALL RIGHTS RESERVED