Job Name:

Type:

Part #:

Notes:

EBCBLED22-40W-CP

Low-Profile 40 Watt 2x2 Center Basket

STANDARD

The EBCBLED22-40W-CP is a low-profile, 2' x 2' LED center basket luminaire, which is designed as a direct replacement for 2' x 2' fluorescent luminaires installed in grid or plaster ceilings. It is designed to deliver general ambient lighting in a variety of indoor settings, including schools, offices, hospitals and stores, and is the perfect choice for both new construction and retrofits. This high-efficacy luminaire provides long-life and uniform illumination, as well as standard 0-10vdc dimming capability.

- Available in 3000k (warm white), 3500k (warm/neutral white), 4000k (neutral white) & 5000k (cool white) color temperatures.*
- Long-life LEDs provide 68,000 hours of operation with at least 70% of initial lumen output (L_{70}).**
- Provides 4,159 luminaire lumens (99 lumens per watt, LPW) at 3000k; 4,263 luminaire lumens (102 LPW) at 3500k; 4,365 luminaire lumens (104 LPW) at 4000k; and 4,576 luminaire lumens (109 LPW) at 5000k.*
- Uniform illumination with no visible LED pixelation.
- Universal 120-277 AC voltage (50-60Hz) is standard.
- 0-10vdc dimming capability is standard.
- Power factor > 0.90.
- Total harmonic distortion < 20%.
- Color rendering index > 80.
- Steel housing and polycarbonate lens.
- Easy installation in new construction or retrofit. Fits in standard 2' x 2' grid ceilings.
- Standard earthquake clips provide secure installation in grid ceilings.
- Standard mounting options include recessed mounting in grid ceilings, or suspended mounting using attached hanging brackets. For other mounting options, see Mounting Kits.

WARRANTY & LISTINGS

- UL listed for damp locations and insulated ceilings (IC-rated) for use in ambient temperatures from -20°C to 40°C (-4°F to 104°F).
- DLC Standard listed.
- Flicker-free per IEEE1789-2015 (low risk of adverse effects of flicker at 100% light output level).
- Complies with RoHS (Restriction on Hazardous Substances) requirements.
- Complies with FCC Part 15, part B.
- Complies with IEEE C.62.41-1991, input transient surge protection (2kV).
- 5-year warranty of all electronics and housing.

MOUNTING KITS

- Optional Surface Mount Kits (LEDSMKT-22) provide for installation on plaster or other hard ceilings.

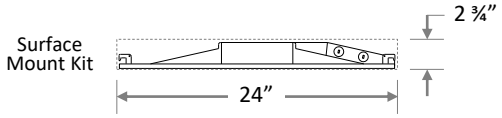

- Flange Mount Kit (FLANGEKIT22-ET) mounts above plaster or other hard ceilings, and the center basket is mounted flush to the ceiling.

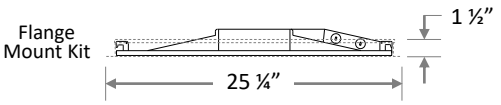

DIMENSIONS

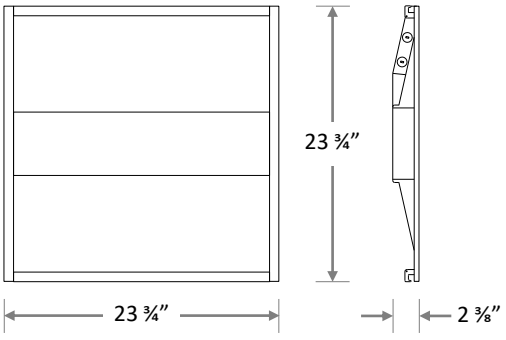

Weight: 6.2 lbs.

Office: 215-512-7000 • Fax 267-288-5604
www.EnvoyLighting.com

Specifications subject to change without prior notice.
© 2020, Envoy Lighting, Inc. ALL RIGHTS RESERVED

Job Name:

Type:

Part #:

Notes:

ORDERING INFORMATION

Model	Luminaire Watts	Luminaire Lumens	Lumens/ Watt	Color Temperature	Input Voltage	Options (Order Separately)
EBCBLED22-40W	42				MV-CP	
		4,159	99	3K = 3000k	Multi-volt (120-277V)	LEDSMKT-22 = Surface Mounting Kit for 2x2
		4,263	102	35K = 3500K		FLANGEKIT22-ET = Flange Mounting Kit for 2x2
		4,365	104	4K = 4000k		LEDPNL-CMK = Cable Mounting Kit, Quantity 6, 1 meter long, 1/16" diameter, with spring clips & adjustable, locking ceiling attachment
		4,576	109	5K = 5000k		

ELECTRICAL DATA

Model	Color Temp.	CRI [1]	Luminaire Lumens	Luminaire Watts	Lumens Per Watt	Input [2] Voltage	Input Current (A)			Power Factor	THD [3]	L_{70} Hours [4]
							120V	240V	277V			
EBCBLED22-40W-3KMV-CP	3000k	> 80	4,159	42	99	120-277	0.35	0.18	0.15	> 90 %	< 20%	68,000
EBCBLED22-40W-35KMV-CP	3500k	> 80	4,263	42	102	120-277	0.35	0.18	0.15	> 90 %	< 20%	68,000
EBCBLED22-40W-4KMV-CP	4000k	> 80	4,365	42	104	120-277	0.35	0.18	0.15	> 90 %	< 20%	68,000
EBCBLED22-40W-5KMV-CP	5000k	> 80	4,576	42	109	120-277	0.35	0.18	0.15	> 90 %	< 20%	68,000

PHOTOMETRIC DATA

EBCBLED22-40W-3KMV-CP (4,159 Lumens)

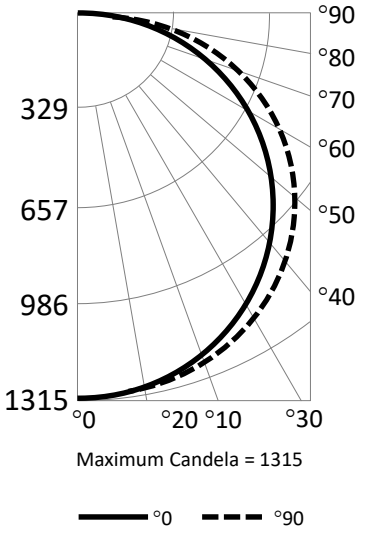

Candlepower Summary

	°0	°90
°0	1,310	1,310
°10	1,304	1,286
°20	1,250	1,228
°30	1,151	1,140
°40	1,010	1,029
°50	831	896
°60	622	740
°70	390	585
°80	161	254
°90	2	3

Zonal Lumen Summary

Zone	Lumens	% Fixture
°10 – °0	124	3.0%
°20 – °0	482	11.6%
°30 – °0	1,029	24.7%
°40 – °0	1,699	40.9%
°50 – °0	2,415	58.1%
°60 – °0	3,096	74.4%
°70 – °0	3,670	88.2%
°80 – °0	4,054	97.5%
°90 – °0	4,152	99.8%
°180 –°90	7	0.2%
°180 – °0	4,159	100.0%

Cone of Light

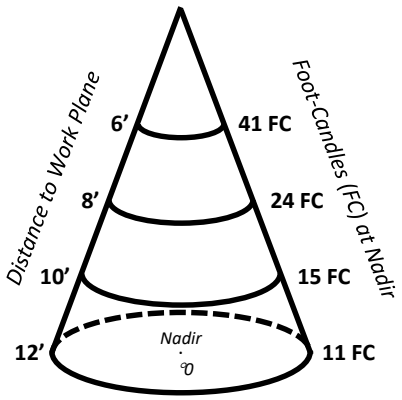

Specifications subject to change without prior notice.
© 2020, Envoy Lighting, Inc. ALL RIGHTS RESERVED

Job Name:

Type:

Part #:

Notes:

MOUNTING KITS

- Optional Surface Mounting Kit (LEDSMKT-22) mounts below the ceiling.
- Optional Flange Mount Kit provides for recessed installation on plaster or other hard ceilings. Attach Flange Mount Kit (FLANGEKIT22-ET) to ceiling joists or other stationary structures, and the panel is mounted flush to the ceiling.
- Optional Cable Mount Kit provides additional security, as well as suspended mounting. Attach one end of the Cable Mount Kit (LEDPNL-CMK) to luminaire earthquake clips using spring clips, and attach the other end to stationary structures using the adjustable, locking ceiling attachment (see picture below right).

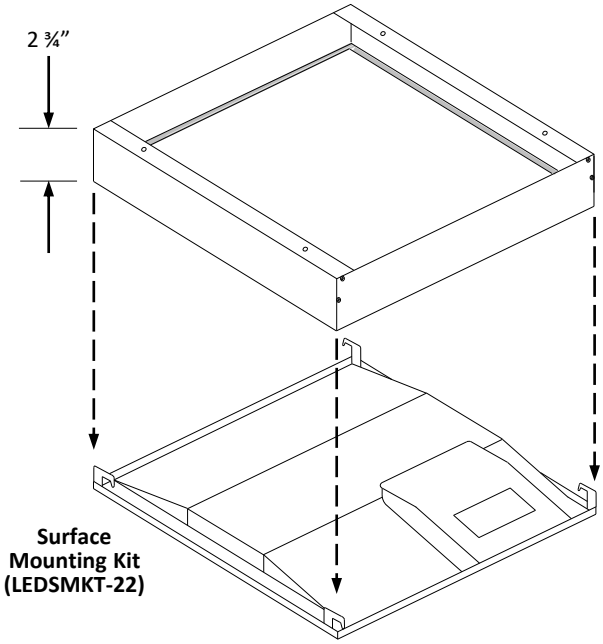

Surface Mounting Kit (LEDSMKT-22)

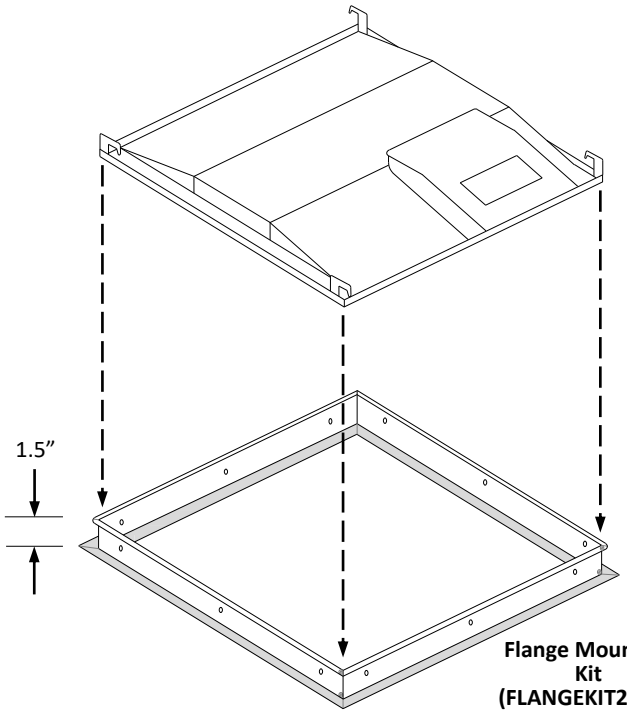

Flange Mounting Kit (FLANGEKIT22-ET)

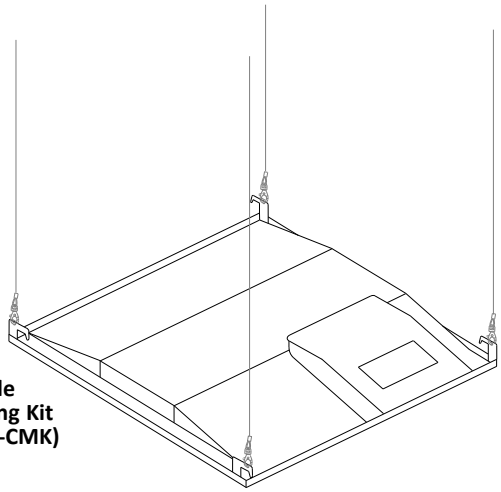

Cable Mounting Kit (LEDPNL-CMK)

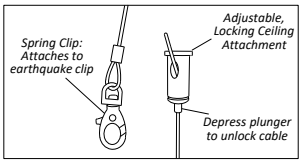

Cable Mount Kit:

- ***Spring Clip***
- ***Adjustable, locking ceiling attachment***

Office: 215-512-7000 • Fax 267-288-5604
www.EnvoyLighting.com

Specifications subject to change without prior notice.
© 2020, Envoy Lighting, Inc. ALL RIGHTS RESERVED