Job Name:

Type:

Part #:

Notes:

PLEDMPALPRO200-300

200-300 Watt, Premium Multi- Purpose LED Area Luminaire

STANDARD

c UL us | DLC PREMIUM | FC | WET | 6kV Surge Protection | IP66

FEATURES

- *Available in 4000k (neutral white) and 5000k (cool white) color temperatures.**
- *Long-life LEDs provide up to 372,000 hours of operation with at least 70% of initial lumen output (L_{70}).***
- *Available models provide from 26,203 to 46,268 lumens, and from 117 to 153 lumens per watt (LPW).*
- *IES roadway photometric distributions include types III & V.*
- *Available in 120-277V or 347-480V (50-60Hz).*
- *0-10vdc dimming capability is standard.*
- *Power factor > 0.90.*
- *Total harmonic distortion < 20%.*
- *Color rendering index > 80.*
- *Optional glare shields (full & half) & wire guards are available.*
- *Optional factory NEMA photocell receptacle installation.*
- *Die cast aluminum housing with durable, dark bronze powder coat finish.*
- *Driver enclosure is sealed with a water-tight, silicon rubber gasket.*
- *Easy installation in new construction or retrofit applications.*

* *Contact factory for other color temperatures and lumen packages.*
** *L70 hours are IES TM-21-11 calculated hours.*

WARRANTY & LISTINGS

- *cULus listed for wet locations in ambient temperatures from -20°C to 45°C (-4°F to 113°F).*
- *IP66 rated for ingress protection.*
- *DLC premium approved.*
- *Flicker-free per IEEE1789-2015 (no observable adverse effects of flicker at 100% light output level).*
- *Rated for 3G vibration.*
- *Lens is IK 9 rated for protection from external impacts.*
- *Salt fog tested for 1,000 hours (ASTM B117). After salt fog testing, paint rated at 9 per ASTM D1654-05 scratch test.*
- *Complies with FCC Part 15, class B.*
- *Complies with EN61000-4-5, surge immunity protection (6kV).*
- *5-year warranty of all electronics and housing.*

Note: *120-277V models also available in roadway types 2 & 4 as well as NEMA flood 3H3V, 4H4V, 5H5V, & 7H7V. Consult factory for details.*

Note: 347-480V models are also available in the distributions listed above but are not DLC qualified.

ORDERING INFORMATION

Example: ELEDMPALPRO200-4K-T3-UNC-P

Model	Color Temperature		Distribution		Voltage		Photocell Receptacle[1]		Mounting Options (Order 1 Separately)	
ELEDMPALPRO200	4K	4000k	T3	Type III	UNC	347-480V	P	NEMA photocell receptacle	LEDMPALPRO-YK-L	Yoke Bracket, 200-300W
ELEDMPALPRO240	5K	5000k	T5	Type V	Blank	120-277V			LEDMPALPRO-TR	Trunnion Bracket, 80-300W
ELEDMPALPRO280							Blank	No receptacle	LEDMPALPRO-ARM	Arm Bracket, 80-300W
ELEDMPALPRO300									LEDMPALPRO-SF	Slip-Fitter Bracket, 80-300W
									JL-205C23-IP65	NEMA Photocell

[1] Ships with shorting cap.

Office: 215-512-7000 • Fax: 267-288-5604
www.EnvoyLighting.com

© 2021, Envoy Lighting, Inc. ALL RIGHTS RESERVED

Job Name:

Type:

Part #:

Notes:

ELECTRICAL DATA

Model	Color Temp.	CRI [1]	Luminaire Lumens	Luminaire Watts	Lumens Per Watt	Input Voltage [2]	Input Current (A)			Power Factor	THD [3]	L_{70} Hours [4]
							120V	240V 200V	277V 480V			
ELEDMPALPRO200-4K-T3	4000k	> 80	26,924	205	132	120-277	1.71	0.85	0.74	> 90%	< 20%	131,000
ELEDMPALPRO200-5K-T3	5000k	> 80	27,429	204	135	120-277	1.70	0.85	0.74	> 90%	< 20%	131,000
ELEDMPALPRO200-4K-T5	4000k	> 80	26,442	205	129	120-277	1.71	0.85	0.74	> 90%	< 20%	131,000
ELEDMPALPRO200-5K-T5	5000k	> 80	27,071	205	132	120-277	1.71	0.85	0.74	> 90%	< 20%	131,000
ELEDMPALPRO240-4K-T3	4000k	> 80	29,589	240	124	120-277	2.00	1.00	0.87	> 90%	< 20%	372,000
ELEDMPALPRO240-5K-T3	5000k	> 80	29,926	240	125	120-277	2.00	1.00	0.87	> 90%	< 20%	372,000
ELEDMPALPRO240-4K-T5	4000k	> 80	27,944	231	121	120-277	1.93	0.96	0.83	> 90%	< 20%	372,000
ELEDMPALPRO240-5K-T5	5000k	> 80	28,410	231	123	120-277	1.93	0.96	0.83	> 90%	< 20%	372,000
ELEDMPALPRO280-4K-T3	4000k	> 80	34,424	279	123	120-277	2.32	1.16	1.01	> 90%	< 20%	372,000
ELEDMPALPRO280-5K-T3	5000k	> 80	34,907	279	125	120-277	2.32	1.16	1.01	> 90%	< 20%	372,000
ELEDMPALPRO280-4K-T5	4000k	> 80	32,546	278	117	120-277	2.32	1.16	1.00	> 90%	< 20%	372,000
ELEDMPALPRO280-5K-T5	5000k	> 80	32,956	278	119	120-277	2.32	1.16	1.00	> 90%	< 20%	372,000
ELEDMPALPRO300-4K-T3	4000k	> 80	44,615	305	146	120-277	2.54	1.27	1.10	> 90%	< 20%	175,000
ELEDMPALPRO300-5K-T3	5000k	> 80	45,555	305	149	120-277	2.54	1.27	1.10	> 90%	< 20%	175,000
ELEDMPALPRO300-4K-T5	4000k	> 80	43,141	305	141	120-277	2.54	1.27	1.10	> 90%	< 20%	173,000
ELEDMPALPRO300-5K-T5	5000k	> 80	44,098	305	144	120-277	2.54	1.27	1.10	> 90%	< 20%	173,000
ELEDMPALPRO200-4K-T3-UNC	4000k	> 80	26,445	194	136	347-480	N/A	0.56	0.40	> 90%	< 20%	131,000
ELEDMPALPRO200-5K-T3-UNC	5000k	> 80	27,065	194	139	347-480	N/A	0.56	0.40	> 90%	< 20%	131,000
ELEDMPALPRO200-4K-T5-UNC	4000k	> 80	26,203	195	134	347-480	N/A	0.56	0.41	> 90%	< 20%	131,000
ELEDMPALPRO200-5K-T5-UNC	5000k	> 80	26,801	195	137	347-480	N/A	0.56	0.41	> 90%	< 20%	131,000
ELEDMPALPRO240-4K-T3-UNC	4000k	> 80	32,022	242	132	347-480	N/A	0.70	0.50	> 90%	< 20%	131,000
ELEDMPALPRO240-5K-T3-UNC	5000k	> 80	32,770	242	135	347-480	N/A	0.70	0.50	> 90%	< 20%	131,000
ELEDMPALPRO240-4K-T5-UNC	4000k	> 80	31,268	241	130	347-480	N/A	0.69	0.50	> 90%	< 20%	131,000
ELEDMPALPRO240-5K-T5-UNC	5000k	> 80	31,989	241	133	347-480	N/A	0.69	0.50	> 90%	< 20%	131,000
ELEDMPALPRO280-4K-T3-UNC	4000k	> 80	36,233	283	128	347-480	N/A	0.82	0.59	> 90%	< 20%	131,000
ELEDMPALPRO280-5K-T3-UNC	5000k	> 80	37,054	282	131	347-480	N/A	0.81	0.59	> 90%	< 20%	131,000
ELEDMPALPRO280-4K-T5-UNC	4000k	> 80	36,417	285	128	347-480	N/A	0.82	0.59	> 90%	< 20%	131,000
ELEDMPALPRO280-5K-T5-UNC	5000k	> 80	37,304	285	131	347-480	N/A	0.82	0.59	> 90%	< 20%	131,000
ELEDMPALPRO300-4K-T3-UNC	4000k	> 80	45,356	303	150	347-480	N/A	0.87	0.63	> 90%	< 20%	176,000
ELEDMPALPRO300-5K-T3-UNC	5000k	> 80	46,268	303	153	347-480	N/A	0.87	0.63	> 90%	< 20%	176,000
ELEDMPALPRO300-4K-T5-UNC	4000k	> 80	44,191	302	146	347-480	N/A	0.87	0.63	> 90%	< 20%	177,000
ELEDMPALPRO300-5K-T5-UNC	5000k	> 80	45,122	302	150	347-480	N/A	0.87	0.63	> 90%	< 20%	177,000

[1] Color rendering index.

[2] All 50-60Hz.

[3] Total harmonic distortion.

[4] L_{70} refers to the number of hours at which lumen output declines to 70% of the initial level. L_{70} hours are IES TM-21-11 calculated hours.

DIMENSIONS

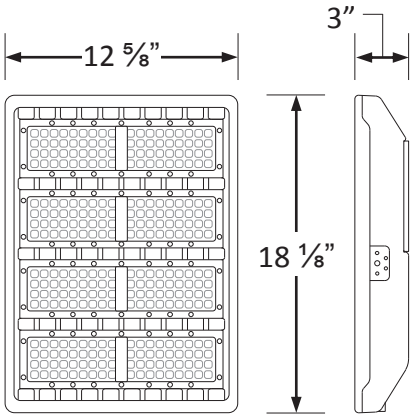

Model	Voltage	Weight
200W	120-277V	13.9 lbs.
240W	120-277V	14.3 lbs.
280W	120-277V	16.1 lbs.
300W	120-277V	16.1 lbs.
200W	347-480V	15 lbs.
240W	347-480V	15 lbs.
280W	347-480V	16.1 lbs.
300W	347-480V	16.3 lbs.

EFFECTIVE PROJECTED AREAS (EPA’s)

200W, 240W, 280W, 300W

Front = 0.32 square feet
Side = 0.45 square feet
Face = 1.91 square feet

Office: 215-512-7000 • Fax: 267-288-5604
www.EnvoyLighting.com

© 2021, Envoy Lighting, Inc. ALL RIGHTS RESERVED

Job Name:

Type:

Part #:

Notes:

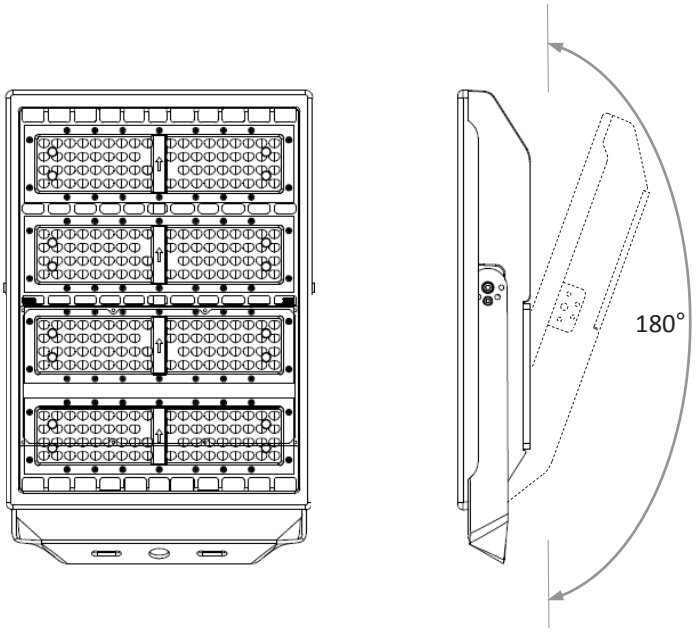

Yoke Mount

LEDMPALPRO-YK-L

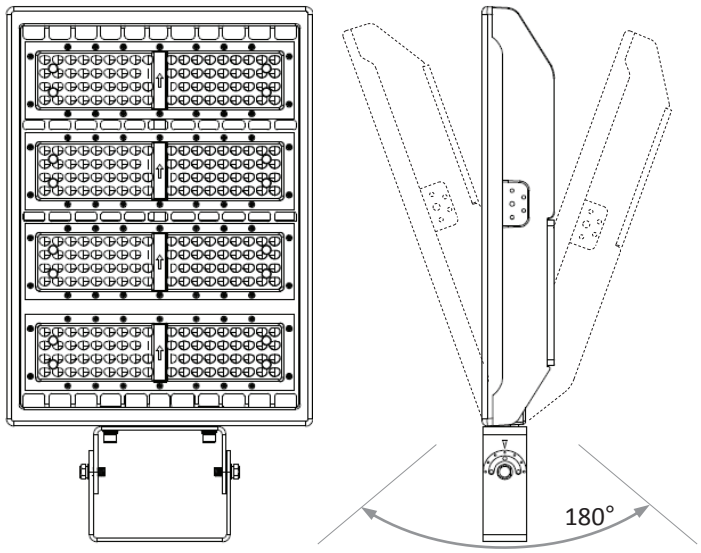

Trunnion Mount

LEDMPALPRO-TR

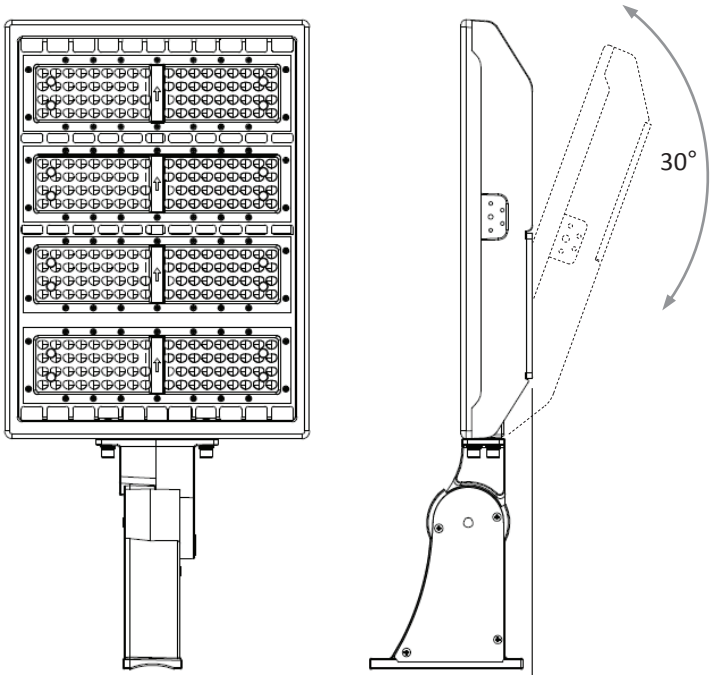

Adjustable Arm Mount

LEDMPALPRO-ARM

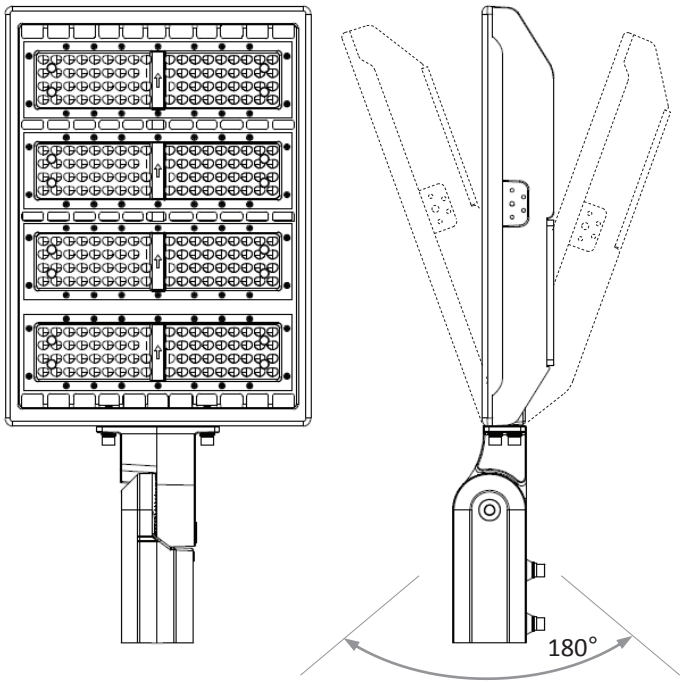

Slip-Fitter Mount

LEDMPALPRO-SF

Office: 215-512-7000 • Fax: 267-288-5604
www.EnvoyLighting.com

© 2021, Envoy Lighting, Inc. ALL RIGHTS RESERVED

Job Name:

Type:

Part #:

Notes:

MOUNTING ACCESSORIES

Wall Mount Bracket
LEDMPALPRO-WMB

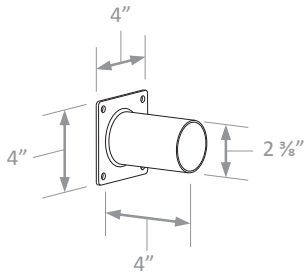

Wall Mount Bracket, 90
LEDMPALPRO-WMB90

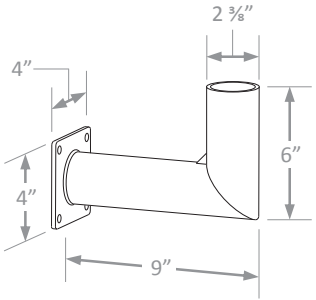

Double 180° Bullhorn Mounting Bracket
LEDMPALPRO-D180BH

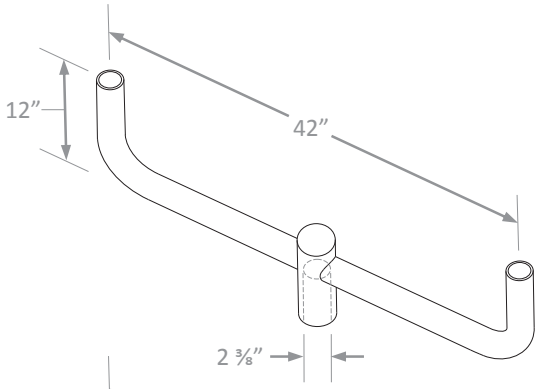

Triple 180° Bullhorn Mounting Bracket
LEDMPALPRO-T180BH

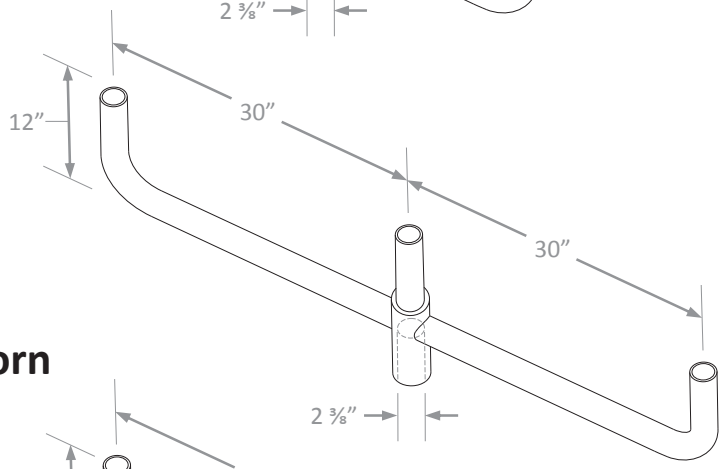

Quadruple 180° Bullhorn Mounting Bracket
LEDMPALPRO-Q180BH

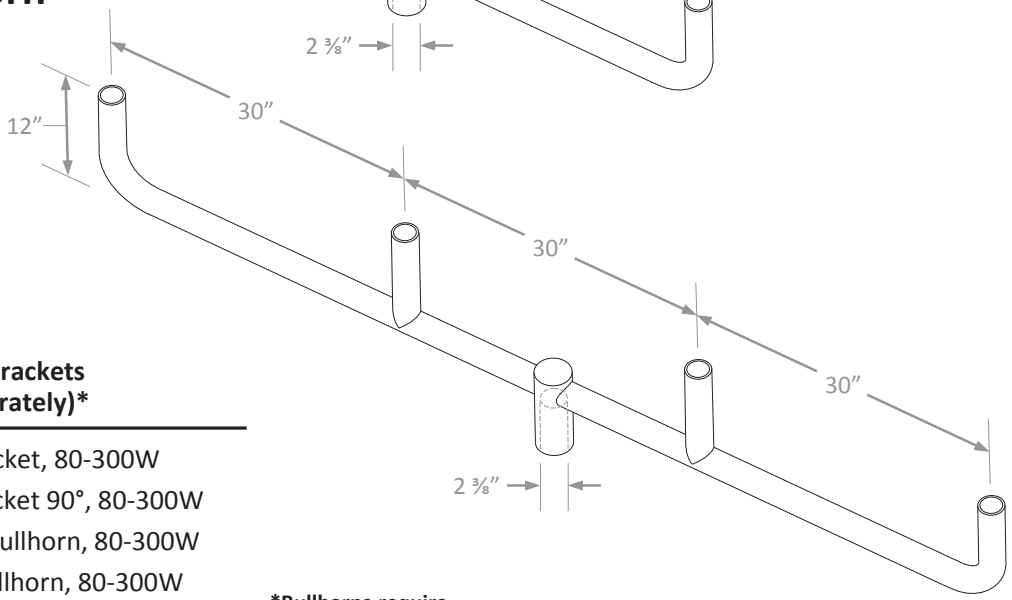

Mounting Brackets (Order Separately)*

LEDMPALPRO-WMB	Wall Bracket, 80-300W
LEDMPALPRO-WMB90	Wall bracket 90°, 80-300W
LEDMPALPRO-D180BH	Double bullhorn, 80-300W
LEDMPALPRO-T180BH	Triple bullhorn, 80-300W
LEDMPALPRO-Q180BH	Quadruple bullhorn, 80-300W

***Bullhorns require slip-fitter mount**

Office: 215-512-7000 • Fax: 267-288-5604
www.EnvoyLighting.com

© 2021, Envoy Lighting, Inc. ALL RIGHTS RESERVED

Job Name:

Type:

Part #:

Notes:

SHIELDS, WIRE GUARDS & NEMA PHOTOCELL INSTALLATION KIT

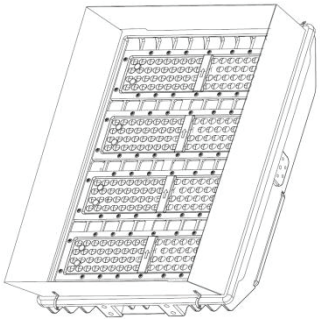

Full Shield

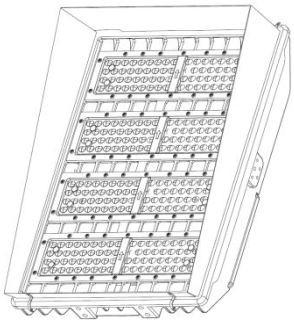

Half Shield

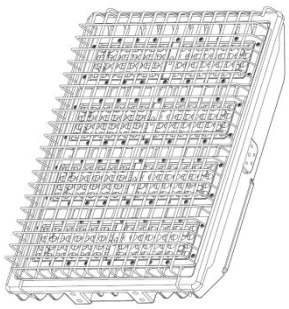

Wire Guard

Can be used in conjunction with shields

Accessories (Order Separately)

LEDMPALPRO-FGS-L	Full Glare Shield, 200-300W
LEDMPALPRO-HGS-L	Half Glare Shield, 200-300W
LEDMPALPRO-WG-L	Wire Guard, 200-300W

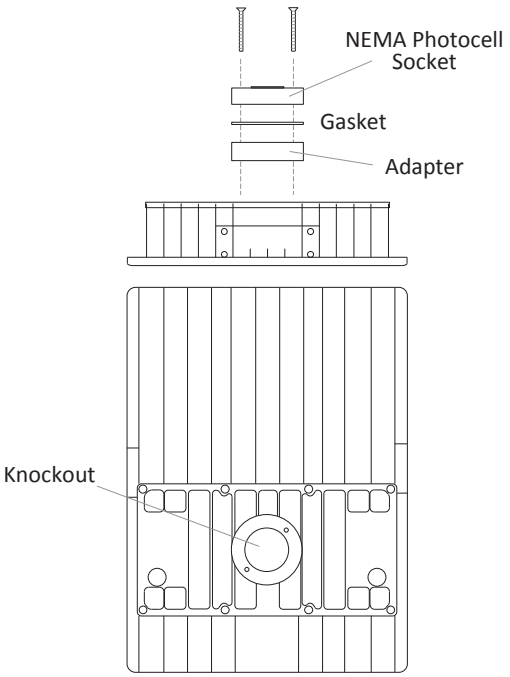

Factory Installed NEMA Photocell Receptacle

Office: 215-512-7000 • Fax: 267-288-5604
www.EnvoyLighting.com

© 2021, Envoy Lighting, Inc. ALL RIGHTS RESERVED

Envoy LIGHTING

Job Name:

Type:

Part #:

Notes:

PHOTOMETRIC DATA – IES Roadway Distributions

ELEDMPALPRO200-4K-T3 (26,924 Lumens, Type III Distribution)

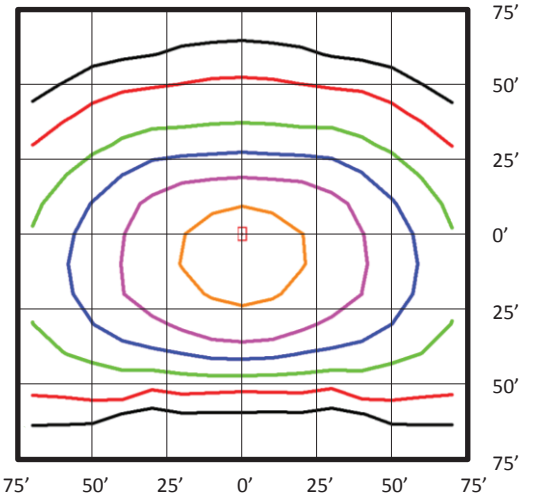

Foot Candles
5.0
2.0
1.0
0.5
0.2
0.1

Luminaire Orientation:

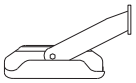

Notes:

- *Isofootcandle plots depict initial footcandles at grade.*
- *Gridlines represent units of mounting height of 25 feet.*

BUG Rating: B4-U3-G4

Zone		Lumens	%
FL	- Front - Low (0-30)	2,665	10%
FM	- Front - Medium (30-60)	9,003	33%
FH	- Front - High (60-80)	5,225	19%
FVH	- Front - Very High (80-90)	402	1%
Total Forward Light		**17,294**	**64%**
BL	- Back - Low (0-30)	1,900	7%
BM	- Back - Medium (30-60)	4,457	17%
BH	- Back - High (60-80)	2,988	11%
BVH	- Back - Very High (80-90)	170	1%
Total Back Light		**9,516**	**35%**
UL	- Up Light - Low (90-100)	19	0%
UH	- Up Light - High (100-180)	95	0%
Total Up Light		**114**	**0%**
Total Lumens		**26,924**	**100%**

ELEDMPALPRO200-4K-T5 (26,442 Lumens, Type V Distribution)

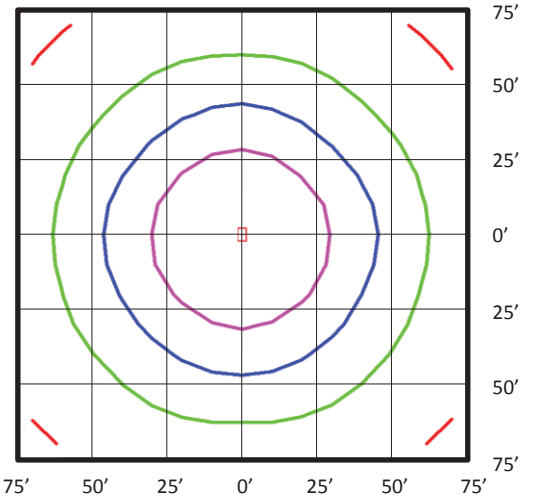

Foot Candles
5.0
2.0
1.0
0.5
0.2
0.1

Luminaire Orientation:

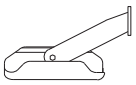

Notes:

- *Isofootcandle plots depict initial footcandles at grade.*
- *Gridlines represent units of mounting height of 25 feet.*

BUG Rating: B5-U3-G5

Zone		Lumens	%
FL	- Front - Low (0-30)	1,374	5%
FM	- Front - Medium (30-60)	5,326	20%
FH	- Front - High (60-80)	5,977	23%
FVH	- Front - Very High (80-90)	806	3%
Total Forward Light		**13,483**	**51%**
BL	- Back - Low (0-30)	1,324	5%
BM	- Back - Medium (30-60)	4,912	19%
BH	- Back - High (60-80)	5,635	21%
BVH	- Back - Very High (80-90)	927	4%
Total Back Light		**12,798**	**48%**
UL	- Up Light - Low (90-100)	32	0%
UH	- Up Light - High (100-180)	129	0%
Total Up Light		**161**	**1%**
Total Lumens		**26,442**	**100%**

ELEDMPALPRO240-4K-T3 (29,589 Lumens, Type III Distribution)

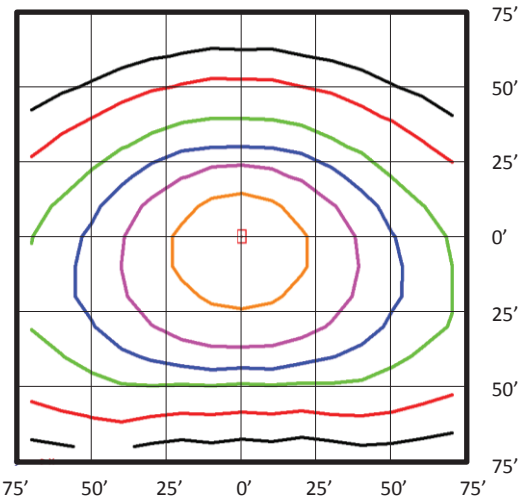

Foot Candles
5.0
2.0
1.0
0.5
0.2
0.1

Luminaire Orientation:

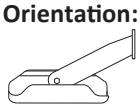

Notes:

- *Isofootcandle plots depict initial footcandles at grade.*
- *Gridlines represent units of mounting height of 25 feet.*

BUG Rating: B4-U0-G4

Zone		Lumens	%
FL	- Front - Low (0-30)	3,329	11%
FM	- Front - Medium (30-60)	9,480	32%
FH	- Front - High (60-80)	5,766	19%
FVH	- Front - Very High (80-90)	460	2%
Total Forward Light		**19,035**	**64%**
BL	- Back - Low (0-30)	2,613	9%
BM	- Back - Medium (30-60)	5,147	17%
BH	- Back - High (60-80)	2,613	9%
BVH	- Back - Very High (80-90)	181	1%
Total Back Light		**10,554**	**36%**
UL	- Up Light - Low (90-100)	0	0%
UH	- Up Light - High (100-180)	0	0%
Total Up Light		**0**	**0%**
Total Lumens		**29,589**	**100%**

Office: 215-512-7000 • Fax: 267-288-5604
www.EnvoyLighting.com

© 2021, Envoy Lighting, Inc. ALL RIGHTS RESERVED

Envoy LIGHTING

Job Name:

Type:

Part #:

Notes:

PHOTOMETRIC DATA – IES Roadway Distributions

ELEDMPALPRO240-4K-T5 (27,944 Lumens, Type V Distribution)

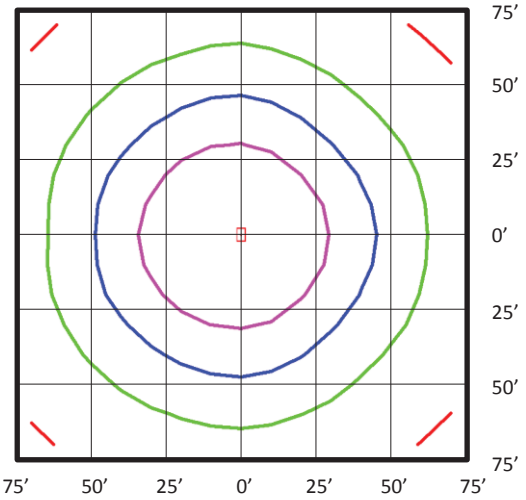

Foot Candles
- 5.0
- 2.0
- 1.0
- 0.5
- 0.2
- 0.1

Luminaire Orientation:

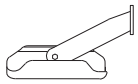

Notes:

- *Isofootcandle plots depict initial footcandles at grade.*
- *Gridlines represent units of mounting height of 25 feet.*

BUG Rating: B5-U0-G5

Zone		Lumens	%
FL	- Front - Low (0-30)	1,381	5%
FM	- Front - Medium (30-60)	5,510	20%
FH	- Front - High (60-80)	6,265	22%
FVH	- Front - Very High (80-90)	959	3%
Total Forward Light		**14,115**	**51%**
BL	- Back - Low (0-30)	1,361	5%
BM	- Back - Medium (30-60)	5,353	19%
BH	- Back - High (60-80)	6,116	22%
BVH	- Back - Very High (80-90)	999	4%
Total Back Light		**13,829**	**49%**
UL	- Up Light - Low (90-100)	0	0%
UH	- Up Light - High (100-180)	0	0%
Total Up Light		**0**	**0%**
Total Lumens		**27,944**	**100%**

ELEDMPALPRO280-4K-T3 (34,424 Lumens, Type III Distribution)

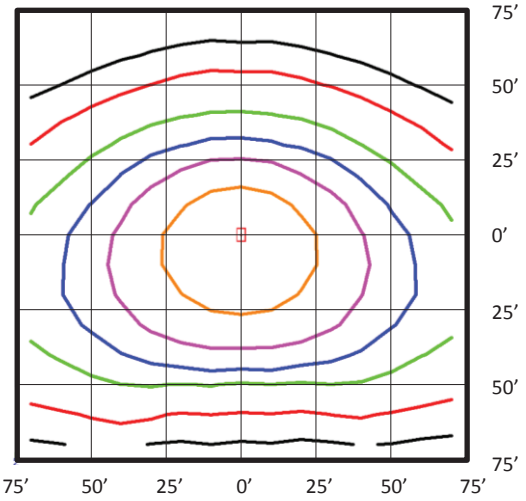

Foot Candles
- 5.0
- 2.0
- 1.0
- 0.5
- 0.2
- 0.1

Luminaire Orientation:

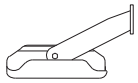

Notes:

- *Isofootcandle plots depict initial footcandles at grade.*
- *Gridlines represent units of mounting height of 25 feet.*

BUG Rating: B4-U0-G4

Zone		Lumens	%
FL	- Front - Low (0-30)	3,878	11%
FM	- Front - Medium (30-60)	11,130	32%
FH	- Front - High (60-80)	6,596	19%
FVH	- Front - Very High (80-90)	498	1%
Total Forward Light		**22,101**	**64%**
BL	- Back - Low (0-30)	3,019	9%
BM	- Back - Medium (30-60)	6,015	17%
BH	- Back - High (60-80)	3,081	9%
BVH	- Back - Very High (80-90)	208	1%
Total Back Light		**12,323**	**36%**
UL	- Up Light - Low (90-100)	0	0%
UH	- Up Light - High (100-180)	0	0%
Total Up Light		**0**	**0%**
Total Lumens		**34,424**	**100%**

ELEDMPALPRO280-4K-T5 (32,546 Lumens, Type V Distribution)

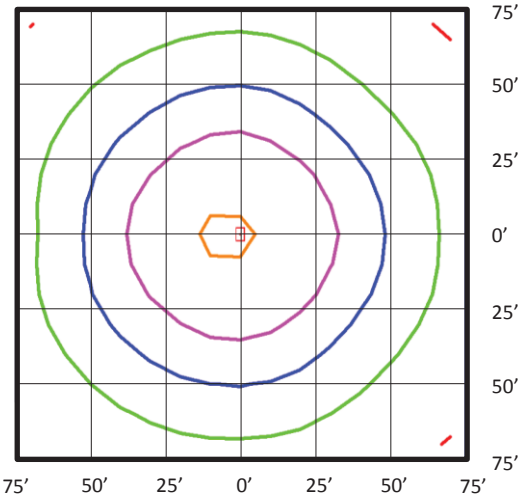

Foot Candles
- 5.0
- 2.0
- 1.0
- 0.5
- 0.2
- 0.1

Luminaire Orientation:

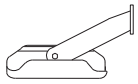

Notes:

- *Isofootcandle plots depict initial footcandles at grade.*
- *Gridlines represent units of mounting height of 25 feet.*

BUG Rating: B5-U0-G5

Zone		Lumens	%
FL	- Front - Low (0-30)	1,622	5%
FM	- Front - Medium (30-60)	6,459	20%
FH	- Front - High (60-80)	7,277	22%
FVH	- Front - Very High (80-90)	1,095	3%
Total Forward Light		**16,453**	**51%**
BL	- Back - Low (0-30)	1,595	5%
BM	- Back - Medium (30-60)	6,256	19%
BH	- Back - High (60-80)	7,090	22%
BVH	- Back - Very High (80-90)	1,152	4%
Total Back Light		**16,093**	**49%**
UL	- Up Light - Low (90-100)	0	0%
UH	- Up Light - High (100-180)	0	0%
Total Up Light		**0**	**0%**
Total Lumens		**32,546**	**100%**

Office: 215-512-7000 • Fax: 267-288-5604
www.EnvoyLighting.com

© 2021, Envoy Lighting, Inc. ALL RIGHTS RESERVED

Envoy LIGHTING

Job Name:

Type:

Part #:

Notes:

PHOTOMETRIC DATA – IES Roadway Distributions

ELEDMPALPRO300-4K-T3 (44,615 Lumens, Type III Distribution)

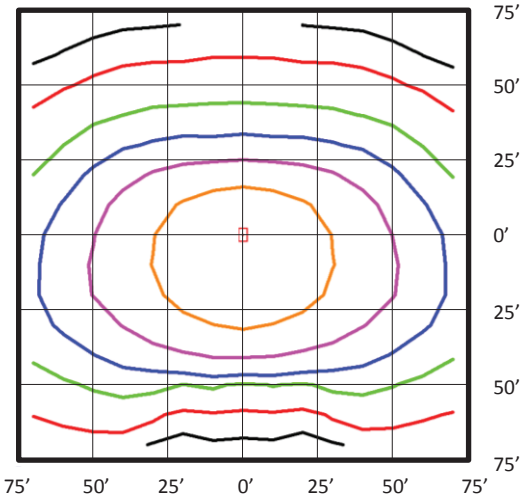

Foot Candles

5.0
2.0
1.0
0.5
0.2
0.1

Luminaire Orientation:

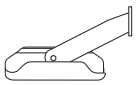

Notes:

- *Isofootcandle plots depict initial footcandles at grade.*
- *Gridlines represent units of mounting height of 25 feet.*

BUG Rating: B4-U3-G4

Zone		Lumens	%
FL	- Front - Low (0-30)	4,598	10%
FM	- Front - Medium (30-60)	14,735	33%
FH	- Front - High (60-80)	8,614	19%
FVH	- Front - Very High (80-90)	729	2%
Total Forward Light		**28,676**	**64%**
BL	- Back - Low (0-30)	3,294	7%
BM	- Back - Medium (30-60)	7,213	16%
BH	- Back - High (60-80)	4,913	11%
BVH	- Back - Very High (80-90)	317	1%
Total Back Light		**15,736**	**35%**
UL	- Up Light - Low (90-100)	34	0%
UH	- Up Light - High (100-180)	169	0%
Total Up Light		**203**	**0%**
Total Lumens		**44,615**	**100%**

ELEDMPALPRO300-4K-T5 (43,141 Lumens, Type V Distribution)

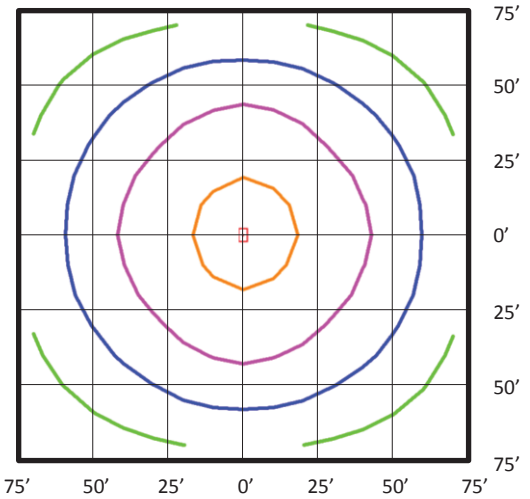

Foot Candles

5.0
2.0
1.0
0.5
0.2
0.1

Luminaire Orientation:

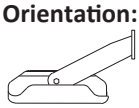

Notes:

- *Isofootcandle plots depict initial footcandles at grade.*
- *Gridlines represent units of mounting height of 25 feet.*

BUG Rating: B5-U3-G5

Zone		Lumens	%
FL	- Front - Low (0-30)	2,016	5%
FM	- Front - Medium (30-60)	8,123	19%
FH	- Front - High (60-80)	9,611	22%
FVH	- Front - Very High (80-90)	1,529	4%
Total Forward Light		**21,279**	**49%**
BL	- Back - Low (0-30)	2,036	5%
BM	- Back - Medium (30-60)	8,303	19%
BH	- Back - High (60-80)	9,750	23%
BVH	- Back - Very High (80-90)	1,546	4%
Total Back Light		**21,634**	**50%**
UL	- Up Light - Low (90-100)	46	0%
UH	- Up Light - High (100-180)	182	0%
Total Up Light		**229**	**1%**
Total Lumens		**43,141**	**100%**

Office: 215-512-7000 • Fax: 267-288-5604
www.EnvoyLighting.com

© 2021, Envoy Lighting, Inc. ALL RIGHTS RESERVED

Envoy LIGHTING

Job Name:

Type:

Part #:

Notes:

PHOTOMETRIC DATA – IES Roadway Distributions

ELEDMPALPRO200-4K-T3-UNC (26,445 Lumens, Type III Distribution)

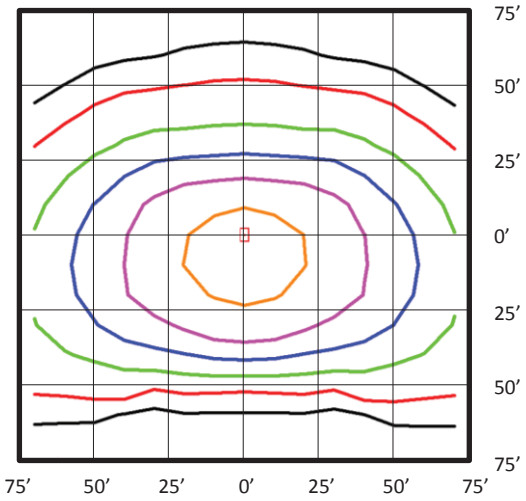

Foot Candles
- 5.0
- 2.0
- 1.0
- 0.5
- 0.2
- 0.1

Luminaire Orientation:

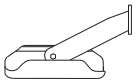

Notes:

- *Isofootcandle plots depict initial footcandles at grade.*
- *Gridlines represent units of mounting height of 25 feet.*

BUG Rating: B4-U3-G4

Zone		Lumens	%
FL	- Front - Low (0-30)	2,617	10%
FM	- Front - Medium (30-60)	8,830	33%
FH	- Front - High (60-80)	5,132	19%
FVH	- Front - Very High (80-90)	395	1%
Total Forward Light		**16,974**	**64%**
BL	- Back - Low (0-30)	1,869	7%
BM	- Back - Medium (30-60)	4,379	17%
BH	- Back - High (60-80)	2,938	11%
BVH	- Back - Very High (80-90)	168	1%
Total Back Light		**9,355**	**35%**
UL	- Up Light - Low (90-100)	19	0%
UH	- Up Light - High (100-180)	97	0%
Total Up Light		**116**	**0%**
Total Lumens		**26,445**	**100%**

ELEDMPALPRO200-4K-T5-UNC (26,203 Lumens, Type V Distribution)

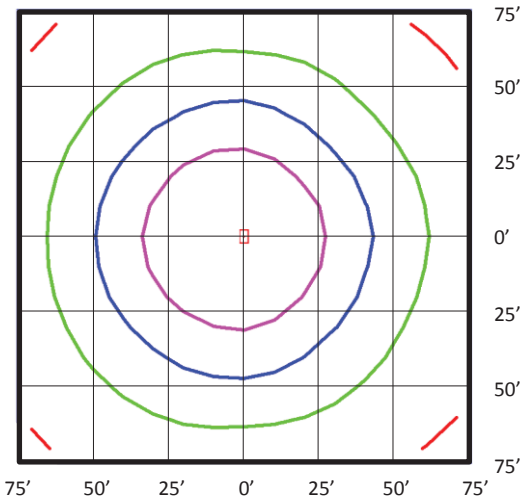

Foot Candles
- 5.0
- 2.0
- 1.0
- 0.5
- 0.2
- 0.1

Luminaire Orientation:

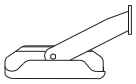

Notes:

- *Isofootcandle plots depict initial footcandles at grade.*
- *Gridlines represent units of mounting height of 25 feet.*

BUG Rating: B5-U3-G5

Zone		Lumens	%
FL	- Front - Low (0-30)	1,333	5%
FM	- Front - Medium (30-60)	5,237	20%
FH	- Front - High (60-80)	5,915	23%
FVH	- Front - Very High (80-90)	774	3%
Total Forward Light		**13,259**	**51%**
BL	- Back - Low (0-30)	1,312	5%
BM	- Back - Medium (30-60)	5,000	19%
BH	- Back - High (60-80)	5,688	22%
BVH	- Back - Very High (80-90)	787	3%
Total Back Light		**12,787**	**49%**
UL	- Up Light - Low (90-100)	32	0%
UH	- Up Light - High (100-180)	125	0%
Total Up Light		**157**	**1%**
Total Lumens		**26,203**	**100%**

ELEDMPALPRO240-4K-T3-UNC (32,022 Lumens, Type III Distribution)

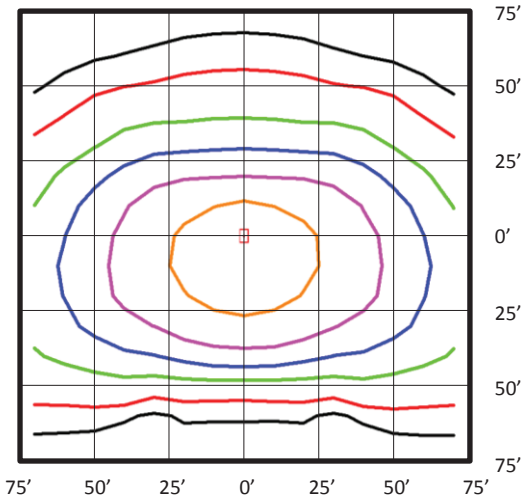

Foot Candles
- 5.0
- 2.0
- 1.0
- 0.5
- 0.2
- 0.1

Luminaire Orientation:

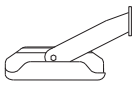

Notes:

- *Isofootcandle plots depict initial footcandles at grade.*
- *Gridlines represent units of mounting height of 25 feet.*

BUG Rating: B4-U3-G4

Zone		Lumens	%
FL	- Front - Low (0-30)	3,168	10%
FM	- Front - Medium (30-60)	10,688	33%
FH	- Front - High (60-80)	6,214	19%
FVH	- Front - Very High (80-90)	479	1%
Total Forward Light		**20,549**	**64%**
BL	- Back - Low (0-30)	2,264	7%
BM	- Back - Medium (30-60)	5,303	17%
BH	- Back - High (60-80)	3,558	11%
BVH	- Back - Very High (80-90)	203	1%
Total Back Light		**11,328**	**35%**
UL	- Up Light - Low (90-100)	24	0%
UH	- Up Light - High (100-180)	121	0%
Total Up Light		**145**	**0%**
Total Lumens		**32,022**	**100%**

Office: 215-512-7000 • Fax: 267-288-5604
www.EnvoyLighting.com

© 2021, Envoy Lighting, Inc. ALL RIGHTS RESERVED

Job Name:

Type:

Part #:

Notes:

PHOTOMETRIC DATA – IES Roadway Distributions

ELEDMPALPRO240-4K-T5-UNC (31,268 Lumens, Type V Distribution)

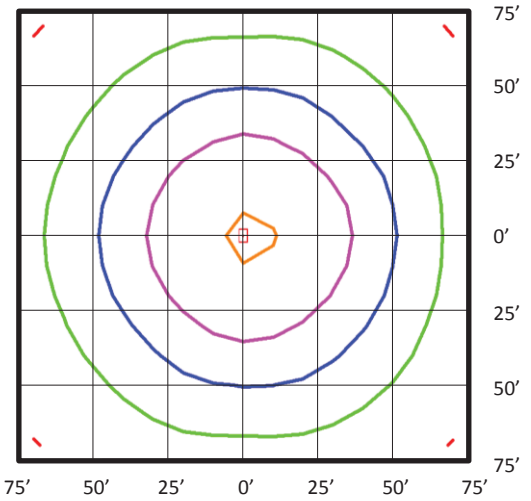

Foot Candles
- 5.0
- 2.0
- 1.0
- 0.5
- 0.2
- 0.1

Luminaire Orientation:

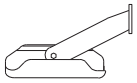

Notes:

- *Isofootcandle plots depict initial footcandles at grade.*
- *Gridlines represent units of mounting height of 25 feet.*

BUG Rating: B5-U3-G5

Zone		Lumens	%
FL	- Front - Low (0-30)	1,611	5%
FM	- Front - Medium (30-60)	6,266	20%
FH	- Front - High (60-80)	6,916	22%
FVH	- Front - Very High (80-90)	886	3%
Total Forward Light		**15,678**	**50%**
BL	- Back - Low (0-30)	1,597	5%
BM	- Back - Medium (30-60)	6,113	20%
BH	- Back - High (60-80)	6,786	22%
BVH	- Back - Very High (80-90)	906	3%
Total Back Light		**15,401**	**49%**
UL	- Up Light - Low (90-100)	37	0%
UH	- Up Light - High (100-180)	152	0%
Total Up Light		**189**	**1%**
Total Lumens		**31,268**	**100%**

ELEDMPALPRO280-4K-T3-UNC (36,233 Lumens, Type III Distribution)

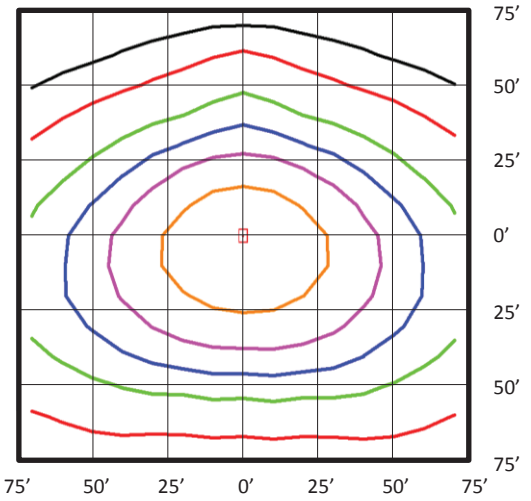

Foot Candles
- 5.0
- 2.0
- 1.0
- 0.5
- 0.2
- 0.1

Luminaire Orientation:

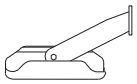

Notes:

- *Isofootcandle plots depict initial footcandles at grade.*
- *Gridlines represent units of mounting height of 25 feet.*

BUG Rating: B4-U3-G4

Zone		Lumens	%
FL	- Front - Low (0-30)	4,010	11%
FM	- Front - Medium (30-60)	11,296	31%
FH	- Front - High (60-80)	6,980	19%
FVH	- Front - Very High (80-90)	555	2%
Total Forward Light		**22,841**	**63%**
BL	- Back - Low (0-30)	3,076	8%
BM	- Back - Medium (30-60)	6,523	18%
BH	- Back - High (60-80)	3,409	9%
BVH	- Back - Very High (80-90)	229	1%
Total Back Light		**13,238**	**37%**
UL	- Up Light - Low (90-100)	25	0%
UH	- Up Light - High (100-180)	129	0%
Total Up Light		**154**	**0%**
Total Lumens		**36,233**	**100%**

ELEDMPALPRO280-4K-T5-UNC (36,417 Lumens, Type V Distribution)

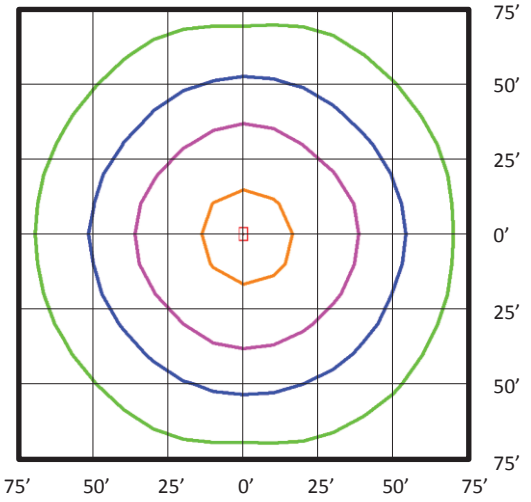

Foot Candles
- 5.0
- 2.0
- 1.0
- 0.5
- 0.2
- 0.1

Luminaire Orientation:

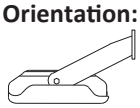

Notes:

- *Isofootcandle plots depict initial footcandles at grade.*
- *Gridlines represent units of mounting height of 25 feet.*

BUG Rating: B5-U3-G5

Zone		Lumens	%
FL	- Front - Low (0-30)	1,922	5%
FM	- Front - Medium (30-60)	7,330	20%
FH	- Front - High (60-80)	8,010	22%
FVH	- Front - Very High (80-90)	1,273	3%
Total Forward Light		**18,535**	**51%**
BL	- Back - Low (0-30)	1,879	5%
BM	- Back - Medium (30-60)	6,962	19%
BH	- Back - High (60-80)	7,798	21%
BVH	- Back - Very High (80-90)	1,052	3%
Total Back Light		**17,692**	**49%**
UL	- Up Light - Low (90-100)	39	0%
UH	- Up Light - High (100-180)	151	0%
Total Up Light		**190**	**1%**
Total Lumens		**36,417**	**100%**

Office: 215-512-7000 • Fax: 267-288-5604
www.EnvoyLighting.com

© 2021, Envoy Lighting, Inc. ALL RIGHTS RESERVED

Envoy LIGHTING

Job Name:

Type:

Part #:

Notes:

PHOTOMETRIC DATA – IES Roadway Distributions

ELEDMPALPRO300-4K-T3-UNC (45,356 Lumens, Type III Distribution)

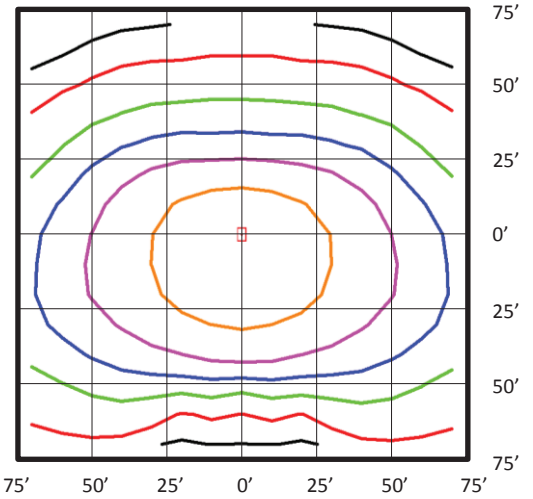

Foot Candles

5.0
2.0
1.0
0.5
0.2
0.1

Luminaire Orientation:

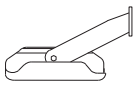

Notes:

- *Isofootcandle plots depict initial footcandles at grade.*
- *Gridlines represent units of mounting height of 25 feet.*

BUG Rating: B4-U3-G5

Zone		Lumens	%
FL	- Front - Low (0-30)	4,424	10%
FM	- Front - Medium (30-60)	14,724	32%
FH	- Front - High (60-80)	9,376	21%
FVH	- Front - Very High (80-90)	882	2%
Total Forward Light		**29,405**	**65%**
BL	- Back - Low (0-30)	3,223	7%
BM	- Back - Medium (30-60)	7,279	16%
BH	- Back - High (60-80)	4,928	11%
BVH	- Back - Very High (80-90)	308	1%
Total Back Light		**15,738**	**35%**
UL	- Up Light - Low (90-100)	38	0%
UH	- Up Light - High (100-180)	175	0%
Total Up Light		**213**	**0%**
Total Lumens		**45,356**	**100%**

ELEDMPALPRO300-4K-T5-UNC (44,191 Lumens, Type V Distribution)

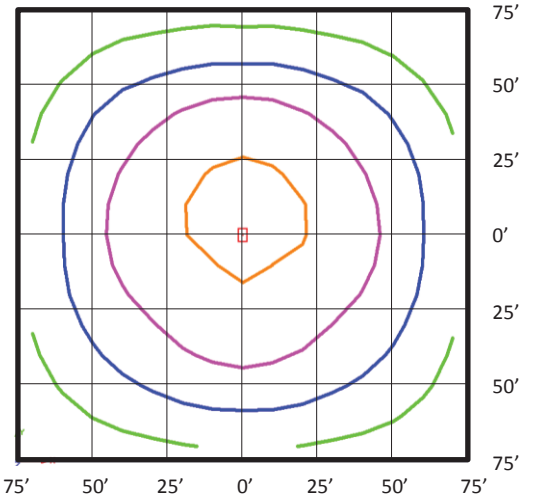

Foot Candles

5.0
2.0
1.0
0.5
0.2
0.1

Luminaire Orientation:

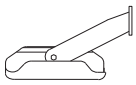

Notes:

- *Isofootcandle plots depict initial footcandles at grade.*
- *Gridlines represent units of mounting height of 25 feet.*

BUG Rating: B5-U3-G5

Zone		Lumens	%
FL	- Front - Low (0-30)	1,809	4%
FM	- Front - Medium (30-60)	8,375	19%
FH	- Front - High (60-80)	9,863	22%
FVH	- Front - Very High (80-90)	1,457	3%
Total Forward Light		**21,504**	**49%**
BL	- Back - Low (0-30)	1,904	4%
BM	- Back - Medium (30-60)	9,762	22%
BH	- Back - High (60-80)	9,717	22%
BVH	- Back - Very High (80-90)	1,063	2%
Total Back Light		**22,446**	**51%**
UL	- Up Light - Low (90-100)	54	0%
UH	- Up Light - High (100-180)	187	0%
Total Up Light		**241**	**1%**
Total Lumens		**44,191**	**100%**

Office: 215-512-7000 • Fax: 267-288-5604
www.EnvoyLighting.com

© 2021, Envoy Lighting, Inc. ALL RIGHTS RESERVED